TWIST: TKN Wireless Indoor Sensor Network Testbed

TKN WSN Group

Telecommunication Networks Group
Technische Universität Berlin

Motivation

- Design, implementation and evaluation of sensor network applications and communication protocols is difficult
- First design steps can often be made with the help of simulations
- Last steps require the use of real hardware, realistic environments and realistic experimental setups

Use a large-scale sensor network testbed with dedicated out-of-band signaling in a realistic setting

TWIST Architecture

TKN
Wireless
Indoor
Sensor
network
Testbed

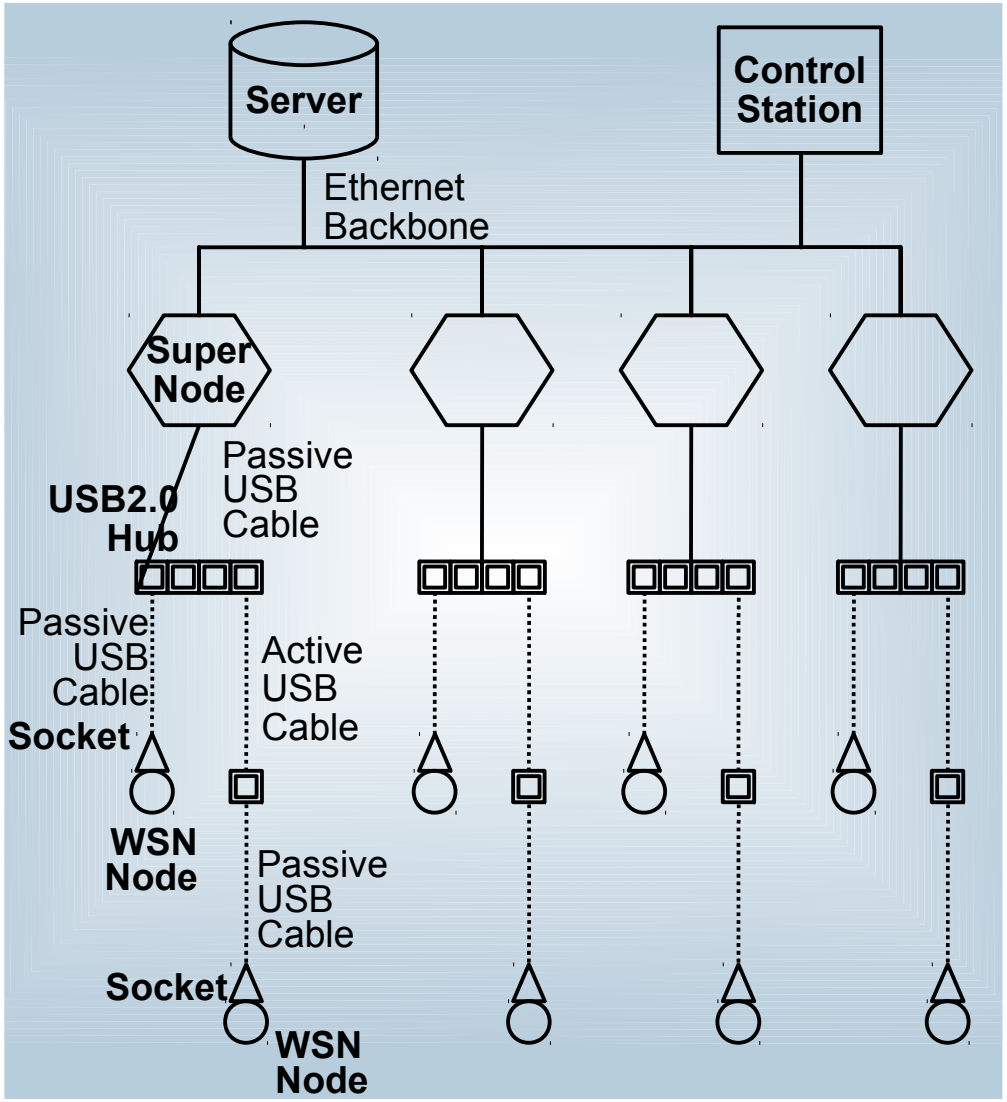

TWIST Components

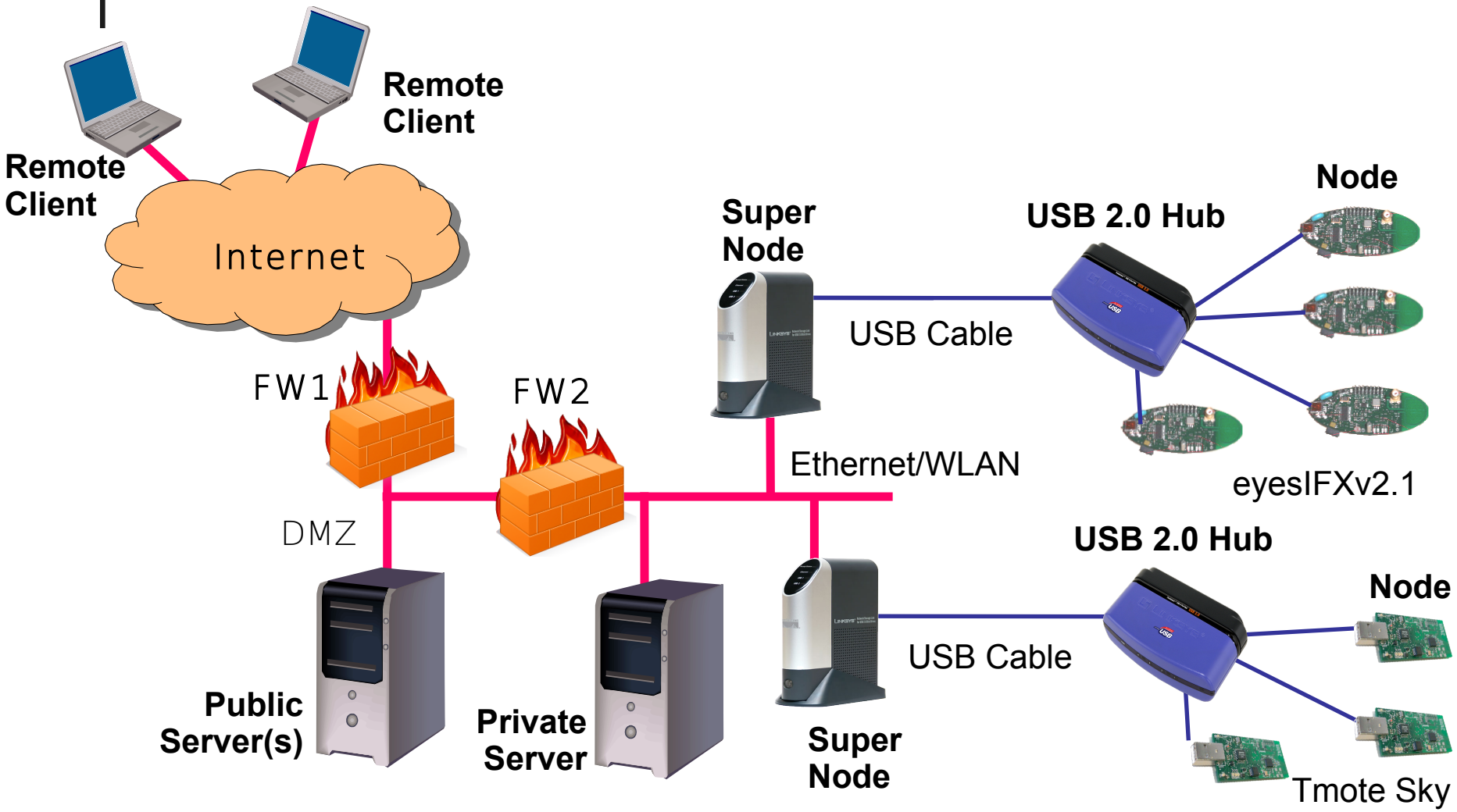

TWIST Features

- Basic services
  - Network-wide re-programming
  - Node configuration
  - Out-of-band extraction of debug information
- Additional features
  - Support for heterogeneous platforms
  - Active power control
  - Support for hierarchical networks
- Built on open standards, open architectures, open source

TWIST Instance at the TKN Building

- Spans 3 floors of the TKN office building
  - More than 1500 m² of instrumented space
- Current configuration: **204 sensor nodes**
  - 102 Tmote Sky
  - 102 eyesIFXv2
  - 46 super nodes
  - 60 USB hubs
  - >1300m USB cabling

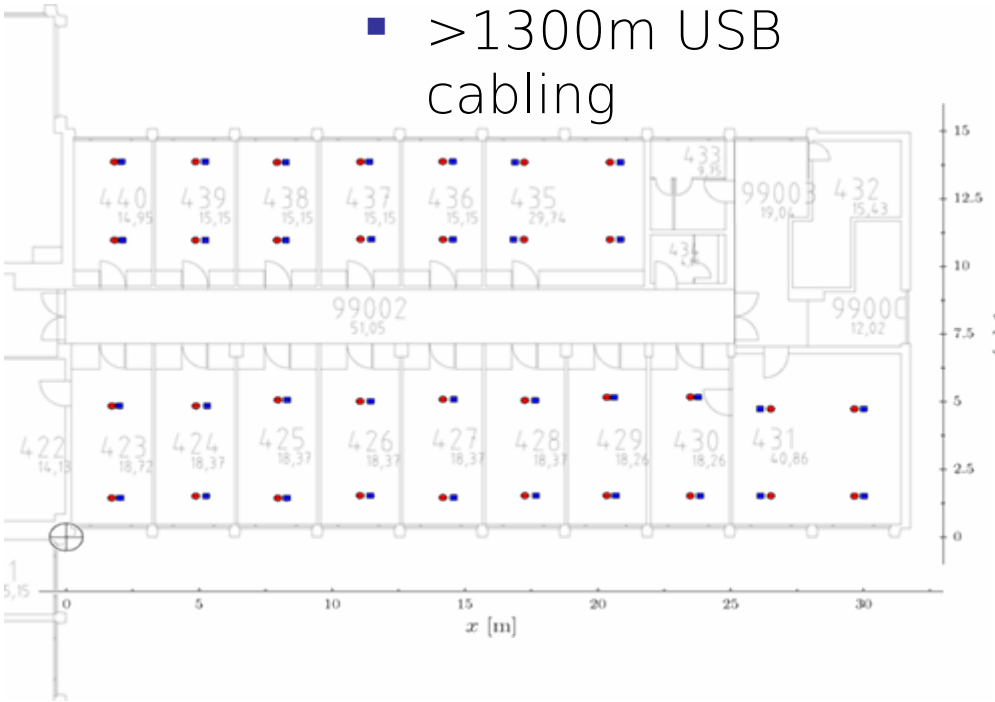

TKN Telecommunication Networks Group

More Information

- V.Handziski et al., "TWIST: A Scalable and Reconfigurable Testbed for Wireless Indoor Experiments with Sensor Network", In Proc. of the 2nd Intl. Workshop on Multi-hop Ad Hoc Networks: from Theory to Reality, (RealMAN 2006)
- http://www.twist.tu-berlin.de

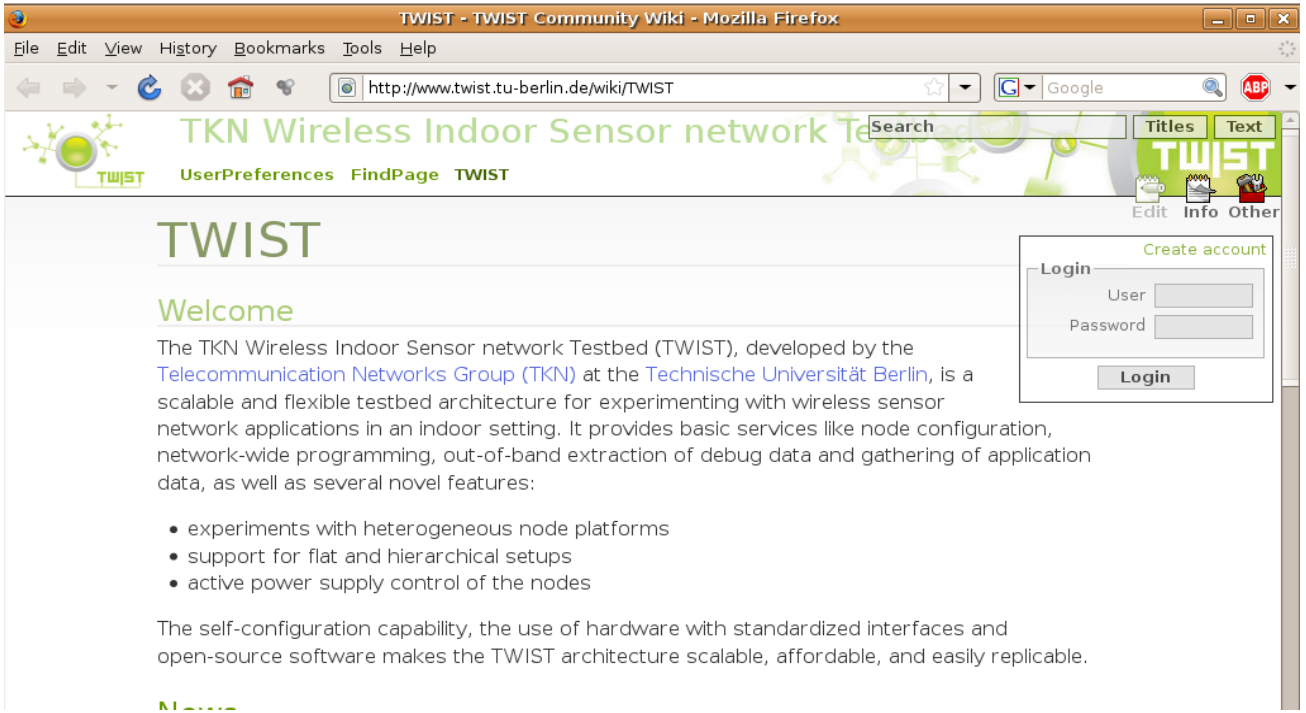

Demo

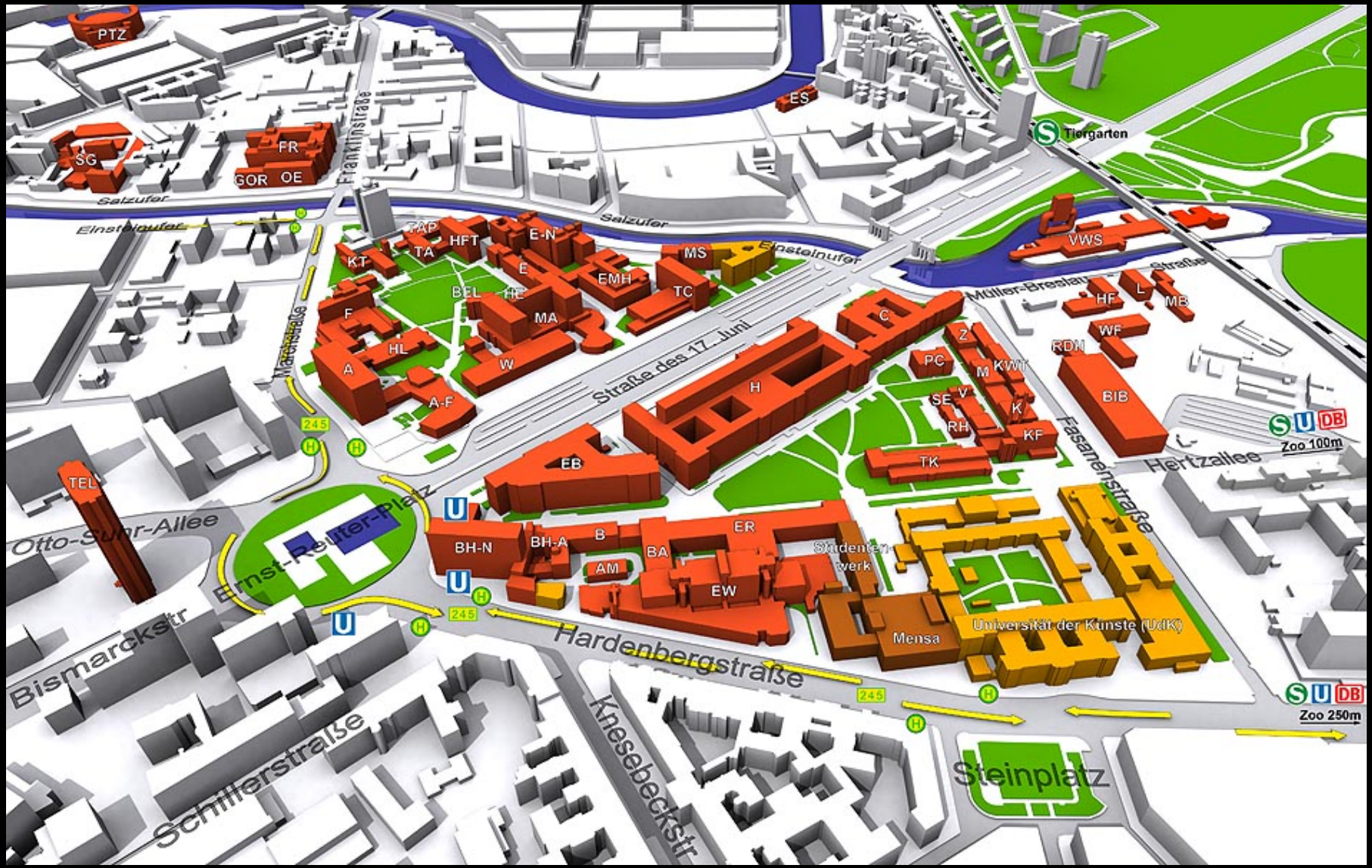
PTZ
SG
FR
GOR
OE
Salzufer
Einsteinufer
Franklinstraße
Marchstraße
ES
Tiergarten
TAP
TA
HFT
E-N
KT
E
EMH
MS
TC
BEL
HE
MA
F
HL
A
W
A-F
Straße des 17. Juni
VWS
Müller-Breslau-Straße
HF
L
MB
WF
RDN
C
Z
PC
M
KWT
H
SE
V
K
RH
KF
BIB
TK
Fasanenstraße
Hertzallee
Zoo 100m
EB
TEL
Otto-Suhr-Allee
Ernst-Reuter-Platz
BH-N
BH-A
B
BA
ER
AM
EW
Studentenwerk
Mensa
Universität der Künste (UdK)
Hardenbergstraße
Bismarckstr
Schillerstraße
Knesebeckstr
Steinplatz
Zoo 250m
245

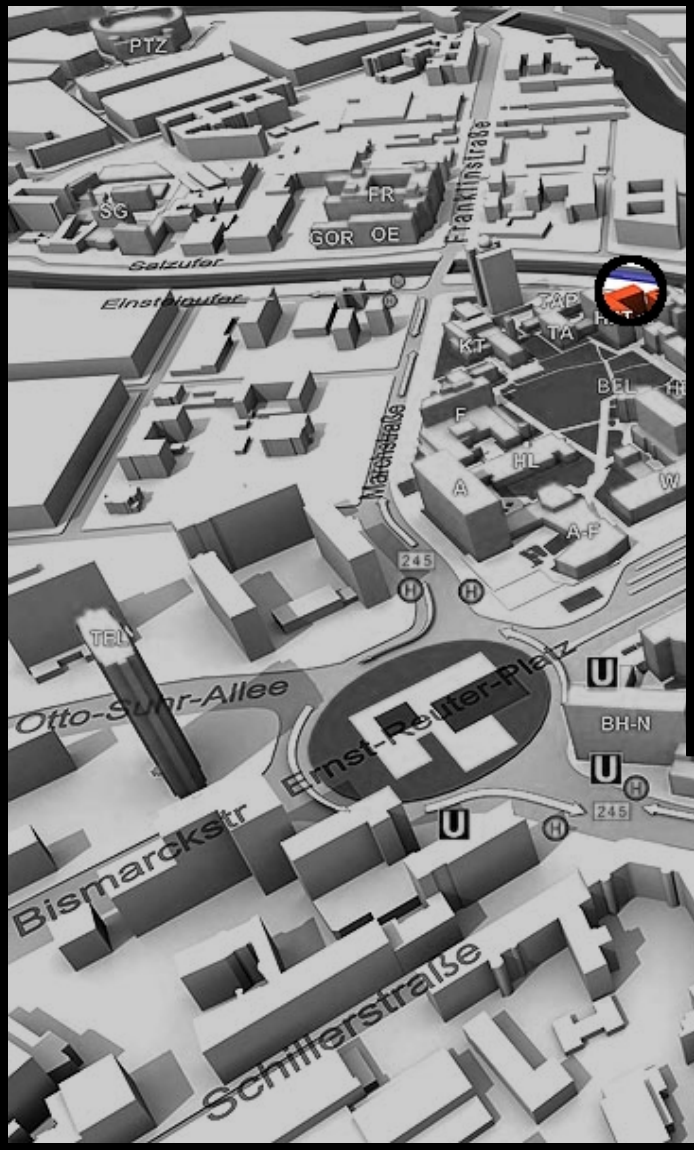
PTZ
SG
FR
GOR
OE
Franklinstraße
Salzufer
Einsteinufer
ZAP
TA
KT
BEL
F
HL
A
A-F
W
Marchstraße
245
TFL
Otto-Suhr-Allee
Ernst-Reuter-Platz
BH-N
Bismarckstr
Schillerstraße
EW
Mensa
Universität der Künste (UdK)
Hardenbergstraße
Knesebeckstr
Steinplatz
S U DB
Zoo 250m

unirad

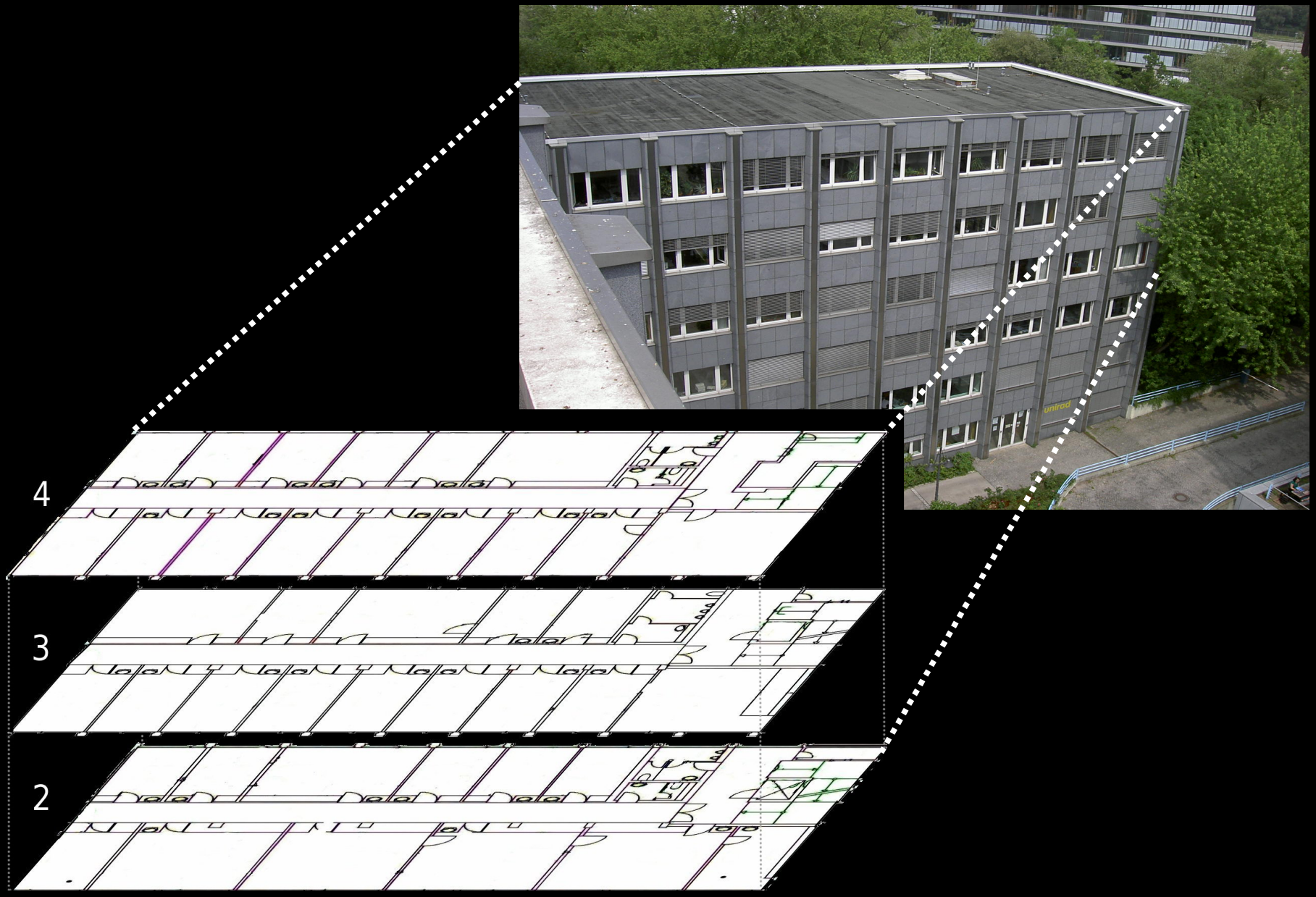
4
3
2

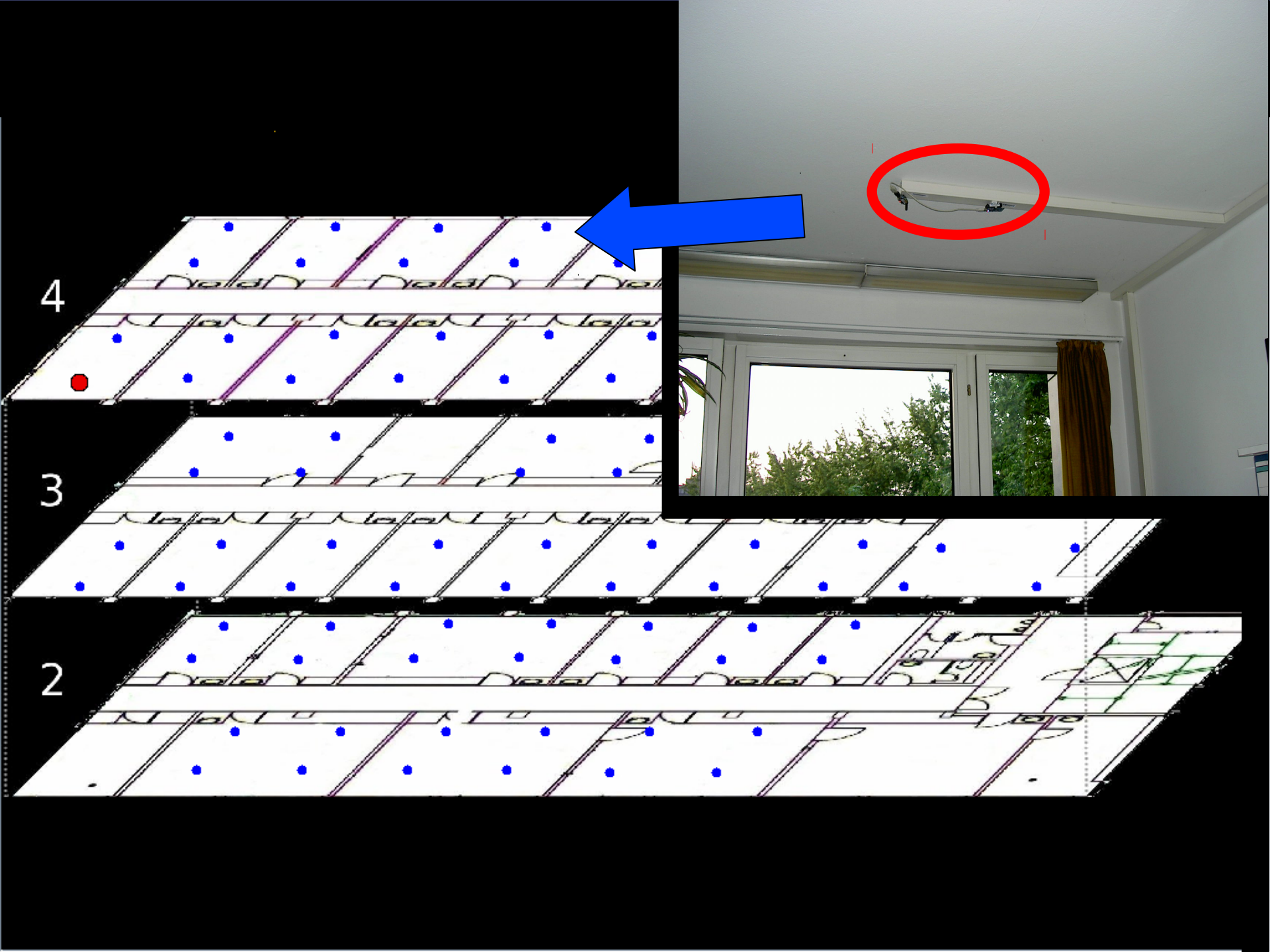
4
3
2

TWIST Sensor Network Topology
Display
Msg. Received
Links
Power Control
All
Selection
Power Down
Power Up
4
3
2